Ve Zee News

Registered by Australian Post
Publication No. SBG 0711

Issue #9
March 1985

Return Address
30 Seventh Ave
Cheltenham S.A. 5014

** VZ-200 **	
PROGRAMS - TAPE NO..	
SIDE A	SIDE B
TITLE	
TAPE NO....	

```
40 ' CASSETTE INSERTS
50 '    BY D.BOYCE
60 LPRINTCHR$(17)
80 LPRINTCHR$(18):LPRINT"I":LPRINT"C0"
100 ' BORDER
130 LPRINT"J460,0" '460 STEPS R  & 0 U/D
140 LPRINT"J0,-480" '0 STEPS R& 480 DOWN
150 LPRINT"J-460,0" '460 STEPS L & 0 U/D
160 LPRINT"J0,480" ' 0 STEPS R &480 UP
170 LPRINT"J0,-40":LPRINT"I"
180 LPRINT"M123,0";"I"
190 LPRINT"S2,P** VZ-200 **":LPRINT"M0,0
"
200 LPRINT"J0,-15":LPRINT"I"
300 LPRINT"J460,0,0,-30"
400 LPRINT"J-460,0,0,-30,460,0,0,-30,-46
0,0,0,-30,460,0,0,-30"
410 LPRINT"J-460,0,0,-30,460,0,0,-30,-46
0,0,0,-30,460,0,0,-30"
420 LPRINT"J-460,0,0,-70,460,0,0,-30,-46
0,0"
500 '
600 LPRINT"J0,346":LPRINT"I":LPRINT"M102
,0"
610 LPRINT"S1,P PROGRAMS - TAPE NO..":LP
RINT"M0,0":LPRINT"I"
620 LPRINT"J0,-30":LPRINT"I"
640 LPRINT"M70,0";"I"
660 LPRINT"S1,P SIDE A              SIDE
B":LPRINT"M0,0"
670 ' 13 SPACES IN LINE 660
680 LPRINT"J0,24,230,0,0,-240":LPRINT"I"
700 LPRINT"M-220,-50"
710 LPRINT"S3,P TITLE"
720 LPRINT"M-230,-140"
730 LPRINT"S2":LPRINT"P  TAPE NO....":LP
RINT"I"
735 LPRINT"M-230,-100"
740 LPRINT"S1"
750 LPRINTCHR$(17):LPRINT
760 END
```

BY A.G. DAVIS

PIE CHART

A SHORT SUBROUTINE THAT DRAWS A CIRCLE AND DRAW A LINE FROM THE CENTRE TO THE OUTSIDE AT THE DEGREES (0-359) SPECIFIED BY YOU. THERE IS A SHORT ROUTINE TO GIVE YOU THE IDEA OF HOW IT WORKS.

```
60199 X1=63:Y1=31:X2=25:Y2=30
60200 COLORC:FORI=1TO 360STEP2:Y=SIN(I/5
7.3)*30+31
60210 X=COS(I/57.3)*25*2+63:SET(X,Y):NEX
T:RETURN
60699 X1=63:Y1=31:X2=25:Y2=30
60700 I=D:Y=SIN(I/57.3)*Y2+Y1
60710 X=COS(I/57.3)*X2*2+X1
60720 X2=INT(X):Y2=INT(Y)
60730 RETURN
60799 X1=63:Y1=31
60800 COLORC:L=0:XD=ABS(X2-X1):YD=ABS(Y2
-Y1):X=X1:Y=Y1:GOSUB60900
60810 IFYD>XDTHEN60850
60820 SET(X,Y):IFX=X2THEN60880
60830 X=X+XI:L=L+YD:IFL<XD-LTHEN60820
60840 Y=Y+YI:L=L-XD:GOTO60820
60850 SET(X,Y):IFY=Y2THEN60880
60860 Y=Y+YI:L=L+XD:IFL<YD-LTHEN60850
60870 X=X+XI:L=L-YD:GOTO60850
60880 X1=X2:Y1=Y2:RETURN
60900 IFX2>X1THENXI=1ELSEIFX2=X1THENXI=0
ELSEXI=-1
60910 IFY2>Y1THENYI=1ELSEIFY2=Y1THENYI=0
ELSEYI=-1
60920 RETURN
```

USE THIS ROUTINE TO TEST THE SUBROUTINES.
X1,Y1=CENTRE OF CIRCLE
X2,Y2=HORIZONTAL AND VERTICAL RADIUS
THESE CAN BE CHANGED FOR SMALLER CIRCLE
D=DEGREES FROM CENTRE
C=COLOUR TO DRAW WITH

```
100 MODE(1):C=3
110 GOSUB 60199
120 D=45:GOSUB60699:GOSUB60799
125 D=127:GOSUB60699:GOSUB60799
130 GOTO130
```

This issue is mostly programs with one hardware project. Thanks to R G Davis, B Hubble, D Boyce, S. Debreceny and L Villani for contributions this month.

Note that I am not offering programs in Ve Zee News on tape any more.

Happy Computing

John Waters

BY STEVE DEBRECENY


```
10 CLS
20 PRINT@266,"[illegible]"
22 SOUND30,1;28,1;25,1;23,1;20,1;18,1;15,1;10,1;15,1;18,1;20,1
24 SOUND23,1;25,1;28,1;30,2;0,8
26 CLS:PRINT@98,"THE SAFE HAS A 4 NUMBER"
28 PRINT@160,"COMBINATION TO OPEN THE DOOR.":SOUND15,1;10,2;0,8
30 SOUND0,8:PRINT@226,"SEE IF YOU CAN CRACK THE"
32 PRINT@288,"COMBINATION TO GET THE GOODIES!":SOUND10,1;15,2
34 FORI=1TO5:SOUND0,6:NEXT:PRINT:CLS:PRINT:COLOR3
36 PRINT"FIRST, LETS SET THE DIFFICULTY.":SOUND10,1;20,2;0,8;0,8
38 PRINT:PRINT"* [illegible] COMBINATION HAS NO ZEROES"
40 PRINT"AND NO TWO NUMBERS THE SAME.":SOUND15,1;0,6
42 PRINT:PRINT"* [illegible] COMBINATION HAS NO ZEROES"
44 PRINT"BUT CAN CONTAIN THE SAME NOS.":SOUND15,1;0,6
46 PRINT:PRINT"* [illegible] COMBINATION CAN CONTAIN"
48 PRINT"BOTH ZEROES AND THE SAME NOS.":SOUND15,1;0,6
50 PRINT@448,"ENTER LEVEL OF DIFFICULTY.":SOUND25,1
52 K$=INKEY$:K$=INKEY$:IFK$=""THEN52
54 D=VAL(K$):IFD<1ORD>3THENSOUND5,2:GOTO52
56 PRINT@475,D:SOUND30,1;0,8
58 CLS
60 IFD=3THEN72
62 FORI=1TO4:RANDOM:C(I)=RND(9):NEXT
64 IFD=2THEN74
66 IFC(1)=C(2)ORC(1)=C(3)ORC(1)=C(4)THEN62
68 IFC(2)=C(3)ORC(2)=C(4)ORC(3)=C(4)THEN62
70 GOTO74
72 FORI=1TO4:RANDOM:C(I)=INT(RND(0)*10):NEXT
74 SOUND5,1;0,1;2,1;0,1;5,1;0,1;2,1;0,1;5,1;0,1;2,2:COLOR3
76 FORI=0TO19:PRINT@70+I,"[illegible]":PRINT@390+I,"[illegible]":NEXT
78 FORI=70TO390STEP32:PRINT@I,"[illegible]";:PRINT@I+20,"[illegible]";:NEXT
80 FORI=1TO4:C$(I)="[illegible]":NEXT
82 GOSUB84:GOTO90
84 COLOR4:PRINT@233,C$(1);:COLOR2:PRINT@237,C$(2);
86 COLOR6:PRINT@241,C$(3);:COLOR8:PRINT@245,C$(4);
88 RETURN
90 FORI=1TO4
92 PRINT@448,"ENTER CODE NO.";I;"                    ":SOUND15,1
94 C$(I)=INKEY$:C$(I)=INKEY$:IFC$(I)=""THEN94
96 IFASC(C$(I))<48ORASC(C$(I))>57THENSOUND5,2:GOTO94
98 SOUND25,1:GOSUB84
100 NEXT
102 S=S+1
104 FORI=1TO4:N(I)=VAL(C$(I)):IFN(I)=C(I)THENA=A+1
106 W(I)=C(I):NEXT
108 IFA=4THEN150
110 FORI=1TO4:FORJ=1TO4:IFN(I)<>W(J)THEN114
112 IFE=0THENB=B+1:W(J)=10:E=1
114 NEXT:E=0:NEXT
120 FORI=1TO4:IFN(I)=0ANDD<3THENM1=1
122 NEXT
124 IFD>1THEN130
126 IFN(1)=N(2)ORN(1)=N(3)ORN(1)=N(4)THENM2=1
128 IFN(2)=N(3)ORN(2)=N(4)ORN(3)=N(4)THENM2=1
130 PRINT@448,"YOU HAVE";B;"NOS. CORRECT          "
132 SOUND30,2;0,8;0,8
134 PRINT@448,"AND";A;"NOS. IN CORRECT POSITION"
136 SOUND30,2;0,8;0,8
138 IFM1=1THENM1=0:PRINT@448,"[illegible]";ELSE142
140 PRINT"[illegible]    ":SOUND15,2;10,3;0,8;0,8;0,8
142 IFM2=1THENM2=0:PRINT@448,"[illegible]";ELSE146
144 PRINT"[illegible]":SOUND15,2;10,3;0,8;0,8;0,8
146 A=0:B=0:GOTO90
150 SOUND10,1;12,1;15,1;18,1;20,1;23,1;25,1;28,1;30,1;28,1;25,1
152 SOUND23,1;20,1;18,1;15,1;13,1;10,2
```

```
154 CLS:FORI=1TO5:FORJ=1TO2
156 IFJ=1PRINT@260,"[illegible]":SOUND30,1:GOTO160
158 PRINT@260," YOU CRACKED THE SAFE ":SOUND20,1
160 SOUND0,1:NEXT:NEXT
162 PRINT@322,"YOU HAD";S;"ATTEMPTS AT THE"
164 PRINT@353,"COMBINATION BEFORE DECODING IT."
166 S=0:A=0
190 FORI=1TO25:READN,L:SOUNDN,L:NEXT
192 DATA18,1,16,1,18,1,16,1,15,3,11,5,0,2,15,1,16,1,18,1,17,1
194 DATA18,1,16,1,15,1,16,1,18,1,20,1,21,1,20,1,21,1,20,1,18,5
196 DATA0,8,0,8,0,8
198 CLS:PRINT@262,"PLAY AGAIN? (Y/N)":SOUND10,1;20,2
200 K$=INKEY$:K$=INKEY$:IFNOT(K$="Y")ANDNOT(K$="N")THEN200
202 IFK$="N"THENSOUND20,1;10,2:CLS:END
204 SOUND30,1:CLS:PRINT@268,"[illegible]":SOUND0,4
206 PRINT@325,"(WHILE I LOCK THE SAFE)":RESTORE:GOTO34
```

```
8 DIMB(12):DIMD(12)
10 CLS
12 SOUND10,1;20,2:INPUT"YEAR REQUIRED";Y
14 L=Y-1:P=INT(L/100):A=INT(P/4):Z=INT(5*L/4)+36-P+A
16 D(1)=Z-INT(Z/7)*7
18 IFY=INT(Y/4)*4ANDY<>INT(Y/400)*400THENL=1ELSEL=0
20 FORM=2TO12:IFM>2THEN24
22 A=M-1:IFL=0THENA=INT(A*63/2)ELSEA=INT(A*62/2):GOTO26
24 A=INT((M+1)*30.6):IFL=0THENA=A-63ELSEA=A-62
26 A=A+D(1):D(M)=A
28 NEXT
30 FORI=2TO12:D(I)=D(I)-INT(D(I)/7)*7:NEXT
32 FORI=1TO12:READB(I):NEXT
34 DATA31,28,31,30,31,30,31,31,30,31,30,31
36 IFL=1THENB(2)=29
38 RESTORE:FORI=1TO12:READX:NEXT
39 SOUND10,1;20,2
40 INPUT"MONTH NO";A:IFA>12ORA<1THENSOUND15,2;10,4:GOTO40
42 LPRINTCHR$(14)
44 FORI=1TOA:READMO,M$:NEXT
46 DATA 8,"JANUARY",8,"FEBRUARY",10,"MARCH",10,"APRIL",11,"MAY"
48 DATA10,"JUNE",10,"JULY",9,"AUGUST",8,"SEPTEMBER",8,"OCTOBER"
50 DATA8,"NOVEMBER",8,"DECEMBER"
52 LPRINTTAB(MO);M$;Y:LPRINT
54 LPRINT"  SUN MON TUE WED THU FRI SAT  "
56 FORR=1TO6:FORC=1TO7
58 IFR=1ANDD(A)=>CTHENLPRINTTAB(C*4-2);" ";:GOTO64
60 IFC-D(A)+(R*7-7)>B(A)THENLPRINT" ";:GOTO64
62 LPRINTTAB(C*4-2):LPRINTUSING"##";C-D(A)+(R*7-7);
64 NEXT:LPRINT
66 NEXT
68 LPRINTCHR$(15)
70 PRINT"DO YOU WANT ANOTHER MONTH? (Y/N)":SOUND20,1;30,2
72 K$=INKEY$:K$=INKEY$:IF(NOTK$="Y")AND(NOTK$="N")THEN72
74 IFK$="N"THENSOUND20,1;10,2:CLS:END
76 PRINT" FOR YEAR";Y;"? (Y/N)":SOUND20,1;30,2
78 K$=INKEY$:K$=INKEY$:IF(NOTK$="Y")AND(NOTK$="N")THEN78
80 IFK$="Y"THEN38ELSE10
```

BY STEVE DEBRECENY

THIS PROGRAM PRINTS OUT ANY NOMINATED MONTH IN CALENDAR FORM, SEE EXAMPLE. THE PROGRAM IS FOR A GP100 PRINTER

eg PRINTOUT

MAY 1985

SUN	MON	TUE	WED	THU	FRI	SAT
			1	2	3	4
5	6	7	8	9	10	11
12	13	14	15	16	17	18
19	20	21	22	23	24	25
26	27	28	29	30	31	

HERE ARE A FEW MORE WORLD CITIES
THAT CAN BE ADDED TO THE WORLD TIMES
PROGRAM, WITH THEIR X,Y POSITIONS
ON THE SCREEN.

NAME	3X	3Y
NOME	3	15
VANCOUVER	18	23
QUITO	33	39
TORONTO	33	25
REYKJAVIK	54	16
OSLO	65	18
BERLIN	65	22
CAIRO	71	31
SINGAPORE	97	40
BOMBAY	87	34
HONG KONG	100	33
TOKYO	110	29
DARWIN	107	43
PERTH	101	48
ALICE SPRINGS	108	46
ADELAIDE	110	49
HOBART	113	52
SYDNEY	114	49
BRISBANE	114	47
CAPETOWN	68	49
HAWAII	5	33
WELLINGTON(NZ)	123	51
MELBOURNE	112	50

$$

© March 1985

All material in Ve Zee News is subject to copyright. Contributed programs are reproduced with permission and on the understanding that they are for the private use of subscibers only. Copyright is retained by the authors.

VZ FAVIT MACHINE
BY A.G. DAVIS

```
OW
10 CLS
11 PRINT"THIS IS A 50 CENT MACHINE"
12 PRINT"THE MACHINE PAYS ON"
13 PRINT"3 CHERRIES* 3 LEMONS* 3 ORANGES
 "
14 PRINT"ALL OTHER COMBINATIONS LOSE"
15 INPUT"HOW MUCH CAN YOU AFFORD";X
16 GOSUB 250
20 A$(1)=" *CHERRY* "
30 A$(2)=" *ORANGE* "
40 A$(3)=" *LEMONS* "
50 FOR I=1TO50
60 A=RND(3):B=RND(3):C=RND(3)
70 PRINT@224,A$(A);A$(B);A$(C)
80 NEXT:FOR N=1TO1000:NEXT
85 PRINT:PRINT
86 IF A=B AND B=C THEN GOTO 150  ELSE PR
INT "YOU LOSE"
87 X=X-.50:GOSUB 260
88 PRINT@320,"DO YOU WANT TO PLAY AGAIN"
;
89 INPUT G$
90 IF LEFT$(G$,1)="Y" THEN 16
91 PRINT" THANK YOU FOR PLAYING":END
150 T=RND(3)
152 IF T=1 THEN PRINT"YOU WIN  ":GOTO 15
5
153 IF T=2 THEN PRINT"YOU WIN  ":GOTO 16
0
154 IF T=3 THEN PRINT"YOU WIN  ":GOTO 17
0
155 PRINT@426,"YOU WIN $5":X=X+5.00:GOSU
B 260
157 GOTO 88
160 PRINT@426,"YOU WIN $10":X=X+10.00:GO
SUB 260
165 GOTO 88
170 PRINT@420,"YOU HIT THE JACKPOT $15":
X=X+15.00
175 GOSUB 260:GOTO 88
250 PRINT@416,"
                    "
260 PRINT@480,"CREDIT METER":PRINT@494,U
SING"$$##.##";X
262 IF X=0 THEN PRINT@420,"YOU'R BROKE "
270 RETURN
```

V.Z. SPEECH SYNTHESIZER.

Modified by Louis Villani

This design is a polygot of various circuits that have appeared in popular magazines over the past 18 months or so.

In brief, the main speech chip access came from Electronics and Computing. U.K. -"B.B.C. Speech syn." - the filter circuitry from Digital and Micro Electronics. U.K. - the amp. from Electronics and Computing -- "Centronics speech syn.",as did the occilator section. Small modifications and combination are mine.

There's not much you can say about this circuit; the SPO 256 - AL2 does 99% of the work.

Some words of warning; do not use the current version of the Tandy chip - it supports a clock only (I believe they have a new version soon - HA!) My own and a friends came from Maplin - Electronics, Rayleigh,

IC1 — 74LS244
IC2 — SP0256-AL2 (DO NOT USE TANDY VERSION) (AVAILABLE FROM 'MAPLINS' U.K.)
IC3 — 74LS629 OR LS124.
IC4 — LM386.

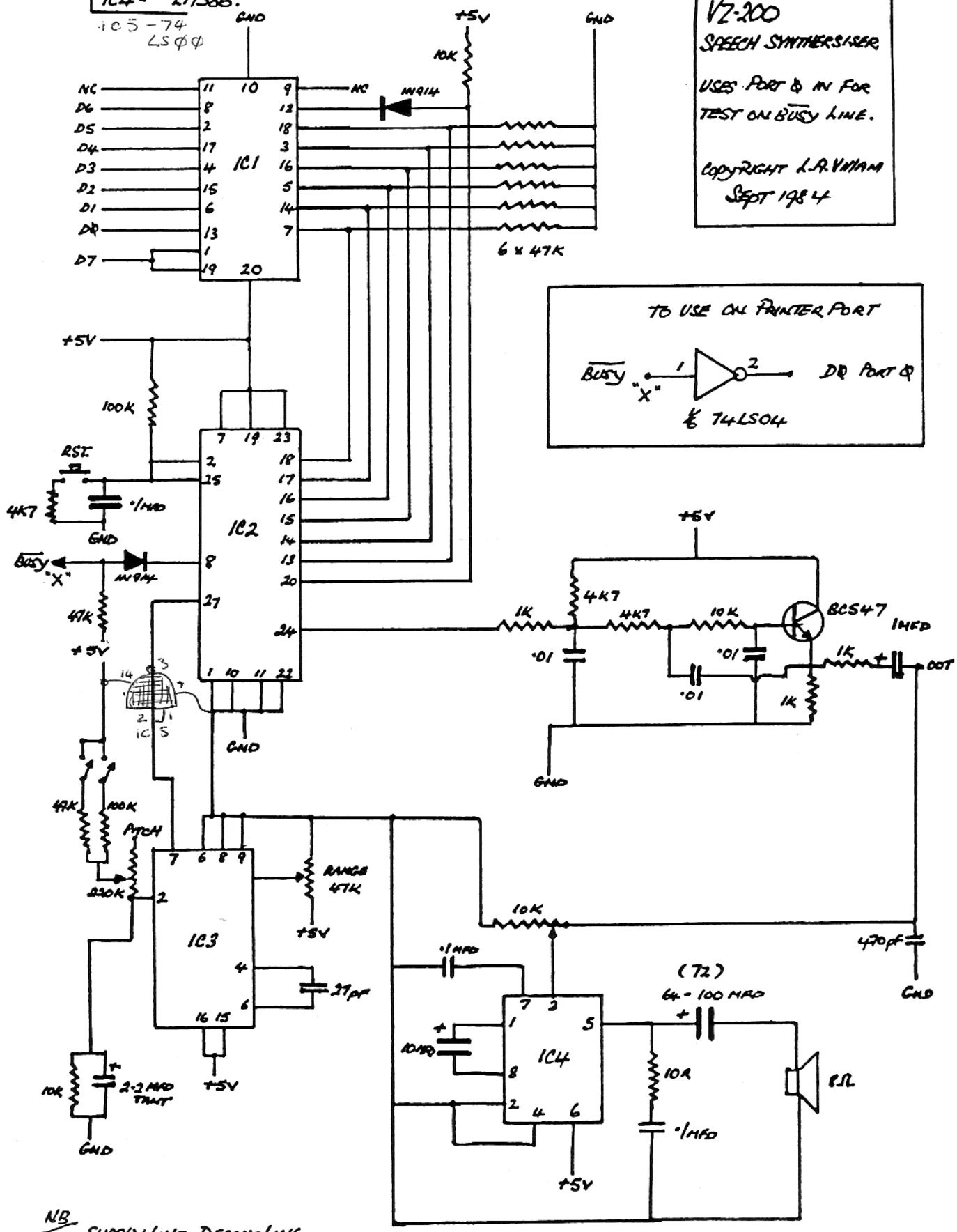

NB SUPPLY LINE DECOUPLING NOT SHOWN. (USE 470MFD ON INPUT IF NECESSARY.)

CAMEL

CAMEL IS A PROGRAM FOR THE APPLE 2
AND YOU HAVE TO RIDE YOUR CAMEL OVER
200 MILES (321 KM) ACROSS THE GREAT
GOBI DESERT WHILE BEING CHASED BY A
TRIBE OF KNOCKED KNEED PYGMIES
GET ACROSS IF YOU CAN.

VZ-200 VERSION BY A.G. DAVIS

```
1 CLS
16 PRINT:PRINT:PRINT:
20 PRINTTAB(13);"CAMEL":PRINT:PRINT:PRIN
T:PRINT:
30 INPUT"   DO YOU NEED INSTRUCTIONS ";I
$
40 IFLEFT$(I$,1)="N"THEN170
50 CLS
60 PRINTTAB(13);"CAMEL":PRINT
70 PRINT"WELCOME TO CAMEL.THE OBJECT IS
 TO TRAVEL 200 MILES ";
75 PRINT"ACROSS THE  GREAT GOBI DESERT."
80 PRINT"A TRIBE OF KNOCK KNEED PYGMIES"
85 PRINT"WILL BE CHASING YOU."
90 PRINT"YOU WILL BE ASKED FOR COMMANDS"
91 PRINT"EVERY SO OFTEN."
100 PRINT:FORTI=1TO5000:NEXT
110 PRINT"YOU HAVE 1 LITRE OF WATER WHIC
H"
115 PRINT"WILL LAST YOU SIX DRINKS.
120 PRINT"YOU MAY RENEW YOUR WATER SUPPL
Y"
125 PRINT"COMPLETELY AT AN OASIS."
130 PRINT"YOU GET HALF A LITRE OF WATER
IF";
135 PRINT"FOUND BY HELP."
140 PRINT"IF HELP DOES NOT FIND YOU AFTE
R"
145 PRINT"COMMAND 6, YOU LOSE."
150 PRINT"GOOD LUCK AND GOOD CAMELING!!.
":PRINT
160 PRINT:PRINT:PRINT:PRINT:INPUT"PRESS
RETURN TO CONTINUE";I$
170 CLS:PRINT
180 PRINT"      #1 DRINK FROM CANTEEN
182 PRINT"      #2 AHEAD MODERATE SPEED"
184 PRINT"      #3 AHEAD FULL SPEED"
186 PRINT"      #4 STOP FOR THE NIGHT"
188 PRINT"      #5 STATUS CHECK
190 PRINT"      #6 HOPE FOR HELP":PRINT
220 PRINT"  YOU ARE IN THE MIDDLE OF THE
"
221 PRINT"  DESERT AT AN OASIS."
230 GOSUB1550
240 IFC>199THEN1090
250 Z=Z-1
260 IFZ=1THENPRINT" ******WARNING******G
ET A DRINK "
270 IFZ<0THEN1490
280 P=P+1
290 X2=INT(RND(10)+1.5)
300 IFQ>0THEN800
310 IFP<4THEN380
320 C1=C1+X2
330 IFC1<CTHEN370
340 PRINT"  THE PIGMIES HAVE CAPTURED YO
U ";
345 PRINT"  CAMEL AND PEOPLE SOUP "
350 PRINT"  THEIR FAVOURITE DISH!!!!!":G
OTO1440
370 PRINT"THE PIGMIES ARE";C-C1;"MILES B
EHIND."
380 PRINT"  YOU HAVE TRAVELLED";C;"MILES
"
385 PRINT"  ALTOGETHER.
390 INPUT"WHAT IS YOUR COMMAND";Y
410 CLS
413 IFY=1THEN690
414 IFY=2THEN490
415 IFY=3THEN560
416 IFY=4THEN630
417 IFY=5THEN660
418 IFY=6THEN430
430 T=RND(11)-1
440 IFT<>1THEN1080
450 PRINT"HELP HAS FOUND YOU IN A STATE
OF";
455 PRINT"UNCONSCIOUSNESS."
460 S=3:Z=4:GOTO240
490 F=F+1
500 IFF=8THEN1070
510 GOSUB740
520 X1=RND(10)-1
530 C=C+X1
540 PRINT"YOUR CAMEL LIKES THIS PACE.":G
OTO240
560 F=F+3
570 IFF>7THEN1070
580 GOSUB740
590 X1=2*(RND(10)-1)
600 C=C+X1
610 PRINT"YOUR CAMEL IS BURNING ACROSS T
HE";
615 PRINT"DESERT SANDS.":GOTO240
630 PRINT"YOUR CAMEL THANKS YOU!"
640 F=0:GOTO250
660 PRINT"YOUR CAMEL HAS";7-F;"GOOD DAYS
 LEFT."
670 PRINT"YOU HAVE";S;"DRINKS LEFT IN YO
UR"
675 PRINT"CANTEEN."
680 PRINT"YOU CAN GO";Z;"COMMANDS WITHOU
T"
685 PRINT"DRINKING."
690 S=S-1
700 IFS<0THEN1080
710 PRINT"BETTER WATCH.FOR AN OASIS!"
720 Z=4:GOTO390
740 A=RND(101)-1
750 IFA>5THEN1000
760 PRINT"WILD SAVAGES HIDDEN IN THE SAN
D"
765 PRINT"HAVE CAPTURED YOU.";
770 PRINT"LUCKILY THE   LOCAL SHEIK HAS
AGREED";
775 PRINT" TO THEIR RANSOM DEMANDS......
.BUT.......   ";
776 PRINT" WATCH FOR THE PIGMIES!!!":PRI
NT
790 PRINT"  YOU HAVE 2 MORE SUBCOMMANDS.
":PRINT
800 PRINT"   #7 - ATTEMPT AN ESCAPE"
805 PRINT"   #8 - WAIT FOR PAYMENT"
820 PRINT:INPUT"   YOUR SUBCOMMANDS";X
840 IFX=8THEN920
850 X1=RND(10)-1
```

```
860 IFX1<5THEN900
870 PRINT"CONGRATULATIONS,YOU SEEM TO HA
VE";
875 PRINT"SUCCESSFULLY ESCAPED!!!!"
880 Q=0:GOTO240
900 PRINT"YOU WERE MORTALLY WOUNDED BY A
  PIG ";
905 PRINT"STABBER WHILE ESCAPING."
910 GOTO1290
920 X1=RND(101)-1
930 REM
940 IFX1>24THEN980
950 PRINT"YOUR RANSOM HAS BEEN PAID AND
  YOU";
955 PRINT" ARE FREE TO GO."
960 Q=0:GOTO240
980 PRINT"THE LOCAL SULTAN IS COLLECTING
"
985 PRINT"  .........JUST WAIT.........
"
990 GOTO240
1000 A=RND(10)-1
1010 IFA>2THEN1120
1020 PRINT"YOU HAVE ARRIVED AT AN OASIS-
---";
1025 PRINT"AND YOUR CAMEL IS FILLING YOU
R"
1026 PRINT"CANTEEN AND EATING FIGS."
1040 Z=4:S=6:RETURN
1070 PRINT"YOU SADISTIC ANIMAL! YOU RAN"
1075 PRINT"YOUR POOR CAMEL TO DEATH!!"
1080 GOTO1290
1090 PRINT"YOU WIN, A PARTY IS BEING GIV
EN"
1095 PRINT"IN YOUR HONOUR..THE PIGMIES A
RE PLANNING TO ATTEND.."
1110 GOTO1440
1120 X1=RND(101)-1
1130 IFX>5THEN1230
1140 PRINT"YOU HAVE BEEN CAUGHT IN A SAN
D"
1145 PRINT"STORM.....GOOD LUCK!"
1150 X5=RND(10)-1
1160 X6=RND(10)-1
1170 IFX6<5THEN1200
1180 C=C+X5
1190 GOTO1210
1200 C=C-X5
1210 PRINT"YOUR NEW POSITION IS ";C;" MI
LES  SO FAR!"
1220 RETURN
1230 X1=RND(101)-1
1240 IFX1>5THENRETURN
1250 C1=C1+1
1260 PRINT"YOU CAMEL HAS HURT HIS HUMP."
1270 PRINT"LUCKILY THE PIGMIES WERE TIRE
D!!!"
1280 RETURN
1290 U=RND(10)-1
1300 PRINT"YOU DIED IN THE DESERT."
1310 IFU>1THEN1340
1320 PRINT"THE NATIONAL CAMEL UNION IS N
OT"
1325 PRINT"ATTENDING YOUR FUNERAL!!!."
1330 GOTO1440
1340 IFU>3THEN1370
1350 PRINT"YOUR BODY WAS EATEN BY VULTUR
ES"
1355 PRINT"AND IMPORTED CANNIBALS!!!"
1360 GOTO1440
1370 IFU>5THEN1400
1380 PRINT"THE LOCAL SHEIK NOW USES YOUR
  SKULL";
1385 PRINT" AS A CHANGE PURSE!!!."
1390 GOTO1440
1400 PRINT"PEOPLE WITH YOUR INTELLIGENCE
"
1405 PRINT"SHOULD STAY OUT OF THE DESERT
."
1420 GOTO1440
1430 PRINT"TURKEYS SHOULD FLY, NOT RIDE
  CAMELS!!!!!!!!!!"
1440 REM
1450 INPUT"WANT A NEW CAMEL AND A NEW GA
ME";D$
1470 IFLEFT$(D$,1)="Y"THEN170
1480 GOTO 1510
1490 PRINT"YOU RAN OUT OF WATER......SOR
RY CHUM!!!"
1500 GOTO1290
1510 PRINTTAB(13);"CHICKEN"
1540 GOTO9000
1550 Z=4:S=6:C=0:C1=0:Q=0:F=0:P=0:RETURN
9000 END
```

```
001 ;RENUMBER**B.HUBBLE**17JAN85
002 ;THIS ASSEMBLER ROUTINE WILL
003 ;RENUMBER A BASIC PROGRAM.
004 ;  IT IS INTENDED AS AN AID
005 ;WHEN DEVELOPING BASIC
006 ;PROGRAMS AND AS SUCH DOES
007 ;NOT SUPPORT "GOTO", "GOSUB"
008 ;"ELSE", OR "THEN" COMMANDS.
009 ; IT IS WISE TO LLIST YOUR
010 ;PROGRAM PRIOR TO USING THE
011 ;RENUMBER ROUTINE TO ENABLE
012 ;EASY EDITORING OF "GOTO",
013 ;"GOSUB", ETC COMMANDS......
014 ;*USE 0C000H FOR THE ORIGIN*
015       LD   BC,0AH
016       LD   IY,7AE9H
017       LD   IX,(7AE9H)
018       LD   (IY+2),0AH
019       LD   (IY+3),00H
020       LD   HL,0AH
021 LOOP  ADC  HL,BC
022       LD   (IX+2),L
023       LD   (IX+3),H
024       LD   E,(IX+0)
025       LD   D,(IX+1)
026       LD   (0BFFFH),DE
027       LD   IX,(0BFFFH)
028       LD   A,(IX+4)
029       CP   0
030       JP   Z,EXIT
031       JP   LOOP
032 EXIT  JP   1A19H
```

R.G. DAVIS

HI RES NUMBERS AND LETTERS

If you would like to use the HI RES letters and figures as I used in the WORLD TIMES program, in a program of your own then here is the subroutine for it and also how you can add all the rest of the ASCII characters if you wish, or any other HI RES character you may like. The first part of the program from line 10 - 30 is a short routine to input some numbers and then a word then calls the subs to display them in HI RES.

Being in basic it is very slow but at the same time can be efective for some displays. If you want to try some other characters of your own then we will have a look at how the letter "A" is made up. Have a look at line 910 and you will find...

910 e$="24144444114114444"

This is the data for the letter "A". The letter is in a three by five grid as indicated by the first two numbers 2 and 4 (you start to count from zero) then the next fifteen (the one's and four's) are the colours that you want the pixels to be.

If you add more ASCII characters to the list you will have to change lines 222 and also 235, in line 222 Q=Q-55, the ASCII code for A is 65 so 65-55 gives us 10, E$(10) gives us the data for the letter "A" so if you insert more ASCII characters in front of the alphabet this part of the line will have to be altered to suit the new position in the array also line 235 looks for "M" and "W" to move the cursor along an extra two places as these are in a 5X5 grid. We will have a look at that line again but broken up into sections to get a better idea of how it goes together.

24 14444 41141 14444

	0	1	2
0	1	4	1
1	4	1	4
2	4	1	4
3	4	4	4
4	4	1	4

If you follow the 4's in the grid they make the letter "A"

If the first two numbers are 99 then you would have a ten by ten grid and so on, but as this would mean 100 bits of data to do this it would mean you would have to put the first half in one variable the next half in another then say E$=Y$+Z$. But just have a go at making up the rest of the ASCII set first and see how you go at that.

```
10 CLEAR 1000:DIM E$(36):GOSUB900:CLS
15 INPUT O
20 MODE(1):X1=0:Y1=59:GOSUB 110
22 FOR N=1 TO 1000:NEXT
25 INPUT E$:MODE(1):X1=0:Y1=59:GOSUB 200
30 FORN=1TO1000:NEXT:GOTO 15
110 X1=0
121 C$=STR$(O)
130 D=LEN(C$)
135 FORU=2TOD
140 E=VAL(MID$(C$,U,1))
150 N=0:A$(0)=E$(E):GOSUB1010:N=1
155 GOSUB 1100
160 X1=X1+4:NEXT:RETURN
200 REM LETTERS
212 L=LEN(E$)
220 FORU=1TOL
221 L$=MID$(E$,U,1)
222 Q=ASC(L$):Q=Q-55
223 IF Q<0THEN X1=X1+4:GOTO240
230 N=0:A$(0)=E$(Q):GOSUB1010:N=1:Y1=59
233 GOSUB 1100:X1=X1+4
235 IFQ=22 OR Q=32 THENX1=X1+2
240 NEXT
250 RETURN
900 E$(0)="24444444111444444":REM "0"
901 E$(1)="24111114444411111":REM "1"
902 E$(2)="24414444141444414":REM "2"
903 E$(3)="24414144141444444":REM "3"
904 E$(4)="24444411114111444":REM "4"
905 E$(5)="24444144141441444":REM "5"
906 E$(6)="24444444141441444":REM "6"
907 E$(7)="24411114111144444":REM "7"
908 E$(8)="24444444141444444":REM "8"
909 E$(9)="24444144141444444":REM "9"
910 E$(10)="24144444114114444":REM "A"
911 E$(11)="24444444141414141":REM "B"
912 E$(12)="24444444111441114":REM "C"
913 E$(13)="24444444111414441":REM "D"
914 E$(14)="24444444141441414":REM "E"
915 E$(15)="24444444141141411":REM "F"
916 E$(16)="24444444111441444":REM "G"
917 E$(17)="24444441141144444":REM "H"
918 E$(18)="24411144444441114":REM "I"
919 E$(19)="24111441111444444":REM "J"
920 E$(20)="24444441141144144":REM "K"
921 E$(21)="24444441111411114":REM "L"
922 E$(22)="44444444111144444411114444 4":REM "M"
923 E$(23)="24444444111144444":REM "N"
924 E$(24)="24444444111444444":REM "O"
925 E$(25)="24444444141144411":REM "P"
926 E$(26)="24444414114444441":REM "Q"
927 E$(27)="24444444141114144":REM "R"
928 E$(28)="24141144141441141":REM "S"
929 E$(29)="24411114444441111":REM "T"
930 E$(30)="24444441111444444":REM "U"
931 E$(31)="24444411111444441":REM "V"
932 E$(32)="44444441111444444111144444 4":REM "W"
933 E$(33)="24441441141144144":REM "X"
934 E$(34)="24444111144444411":REM "Y"
935 E$(35)="24411444141444114":REM "Z"
960 RETURN
1010 X=VAL(LEFT$(A$(0),1))
1015 Y=VAL(MID$(A$(0),2,1))
1020 FOR I=0 TO N
1025 A$(I)=RIGHT$(A$(I),LEN(A$(I))-2)
1030 FOR J=0 TOX:FOR K=0 TO Y
1035 T*(I,J,K)=VAL(LEFT$(A$(I),1))
1040 IF LEN(A$(I))=1 THEN 1060
1050 B$=RIGHT$(A$(I),LEN(A$(I))-1)
1055 A$(I)=B$
1060 NEXT:NEXT:NEXT:RETURN
1100 FOR I=0 TO Y:FOR J=0 TO X
1105 COLOR T*(N-1,J,I)
1110 SET(X1+J,Y1+I):NEXT:NEXT:RETURN
```